HD40A

NF DIN 15018

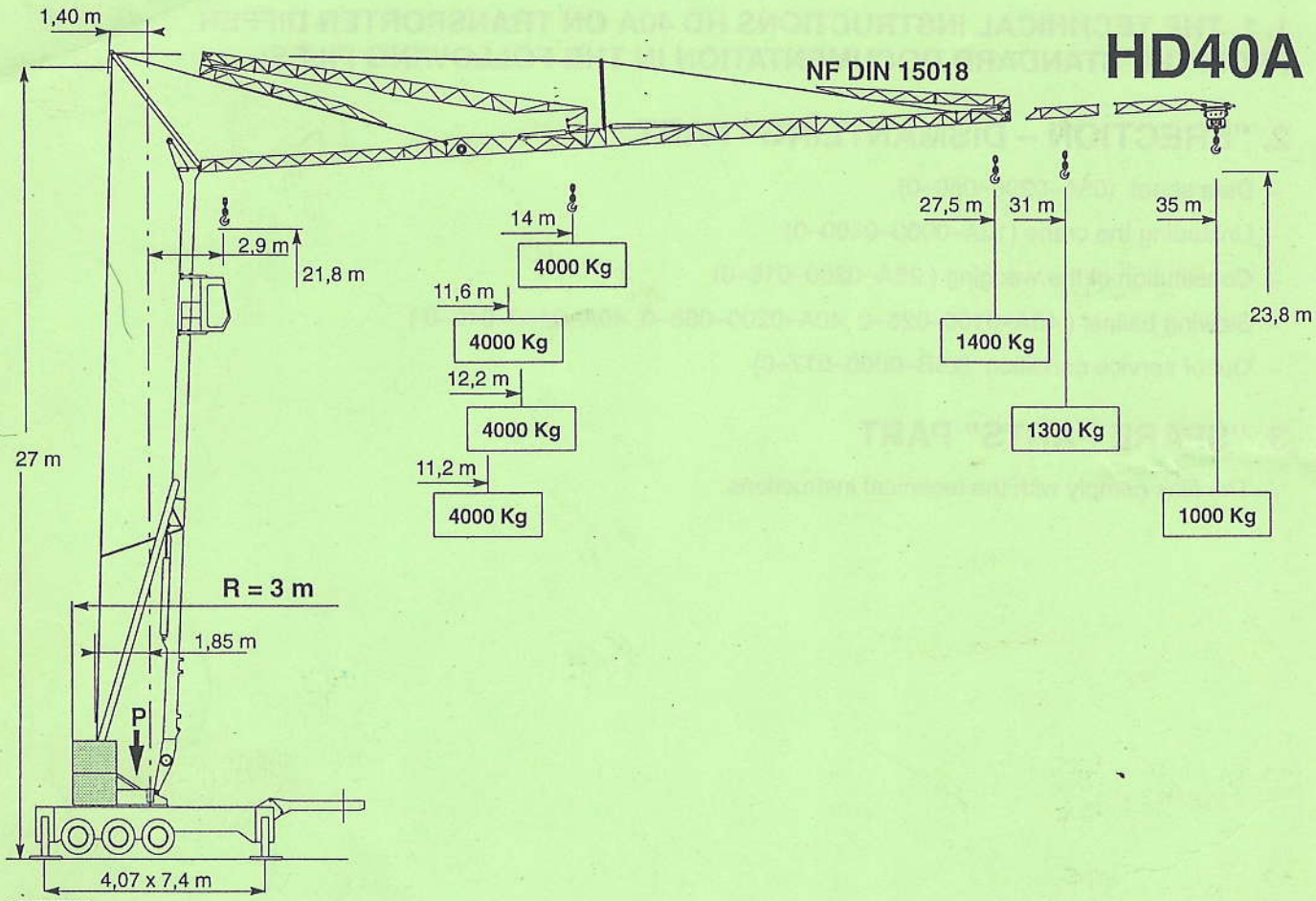

4000 Kg 14 m																								
4000 Kg 11,6 m	3820	3462	3163	2909	2691	2502	2335	2188	2058	1940	1835	1739	1652	1572	1499	1400								
4000 Kg 12,2 m		3700	3382	3111	2879	2677	2500	2343	2204	2079	1967	1865	1772	1687	1609		1471	1410	1353	1300				
4000 Kg 11,2 m	3693	3347	3057	2811	2600	2416	2255	2113	1986	1873	1770	1678	1593	1516	1445		1320	1264	1212	1164	1119	1077	1037	100
m →	12	13	14	15	16	17	18	19	20	21	22	23	24	25	26	27,5	28	29	30	31	32	33	34	35

	20 LVF 10	MV	4,5 m / mn – 2000 Kg	2,25 / mn – 4000 Kg	15 kW
		PV	27 m / mn – 2000 Kg	13,5 m / mn – 4000 Kg	
		GV	50 m / mn – 1350 Kg	25 m / mn – 2700 Kg	
	15 RPC10	MV	9 m / mn – 2000 Kg	4,5 / mn – 4000 Kg	11 kW
		PV	27 m / mn – 2000 Kg	13,5 m / mn – 4000 Kg	
		GV	54 m / mn – 1000 Kg	27 m / mn – 2000 Kg	
	3D2V5.2	21 – 42 m / mn			2 kW
	RCV 22	0 → 0,8 tr / mn / U / min / r.p.m.			2,2 kW
	TVD 121	25 m / mn			2 x 1 kW

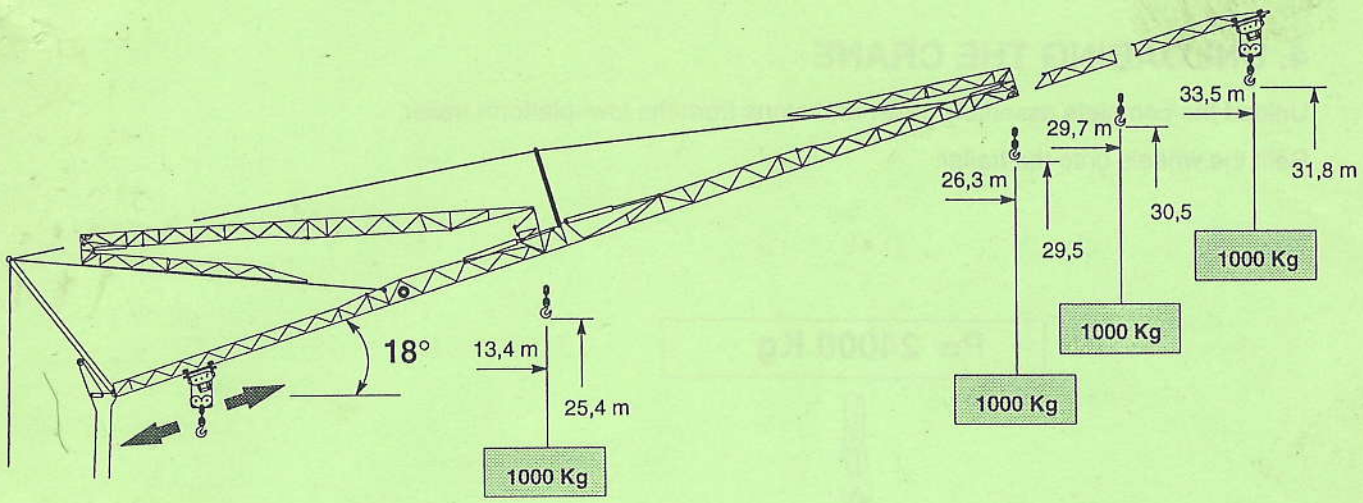

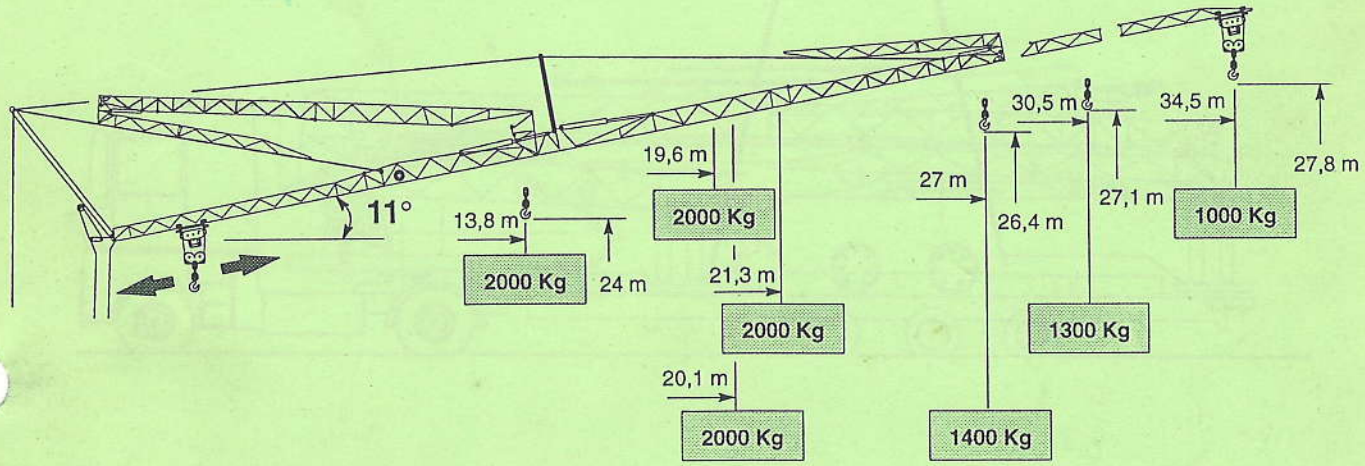

2000 Kg 13,8 m																	
2000 Kg 20,1 m		1899	1795	1701	1616	1538	1466	1400									
2000 Kg 21,3 m			1930	1829	1738	1955	1478	1538	1443	1383	1327	1300					
2000 Kg 19,6 m	1953	1842	1741	1649	1566	1490	1421	1356	1297	1242	1191		1144	1099	1058	1019	1000
m →	20	21	22	23	24	25	26	27	28	29	30	30,5	31	32	33	34	34,5

4. UNLOADING THE CRANE

Unload the complete assembly trailer and crane from the low–platform trailer.

Refit the wheels onto the trailer.

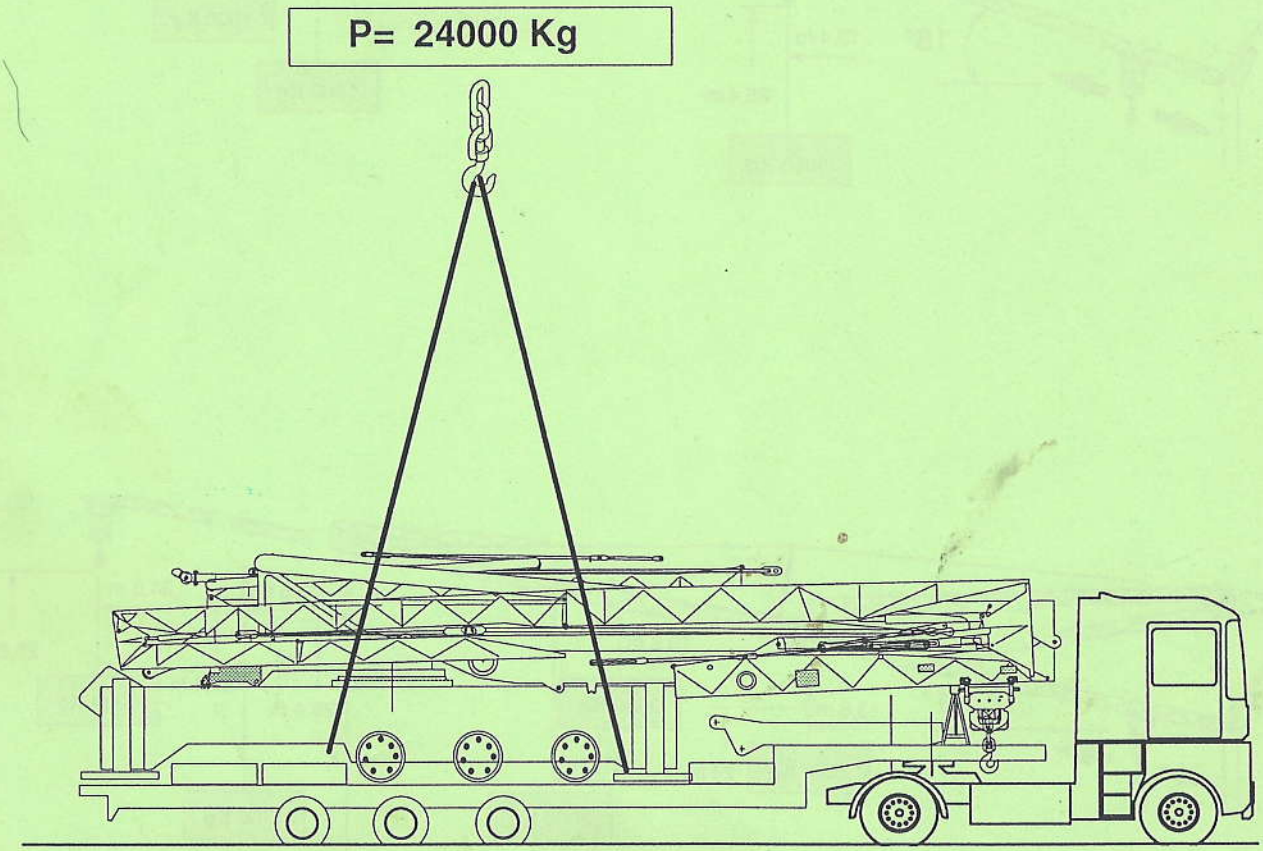

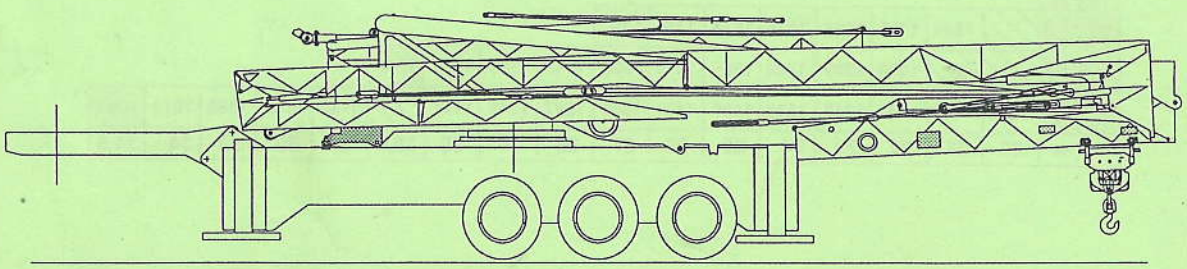

– Pin–connect the jib assembly (**1**) by means of the shafts (**2**), screw bolts (**3**), washers (**4**) and the steel sheet nuts (**5**), then pin–connect the tie bars (**see detail and page 63R–0600–017–0).**

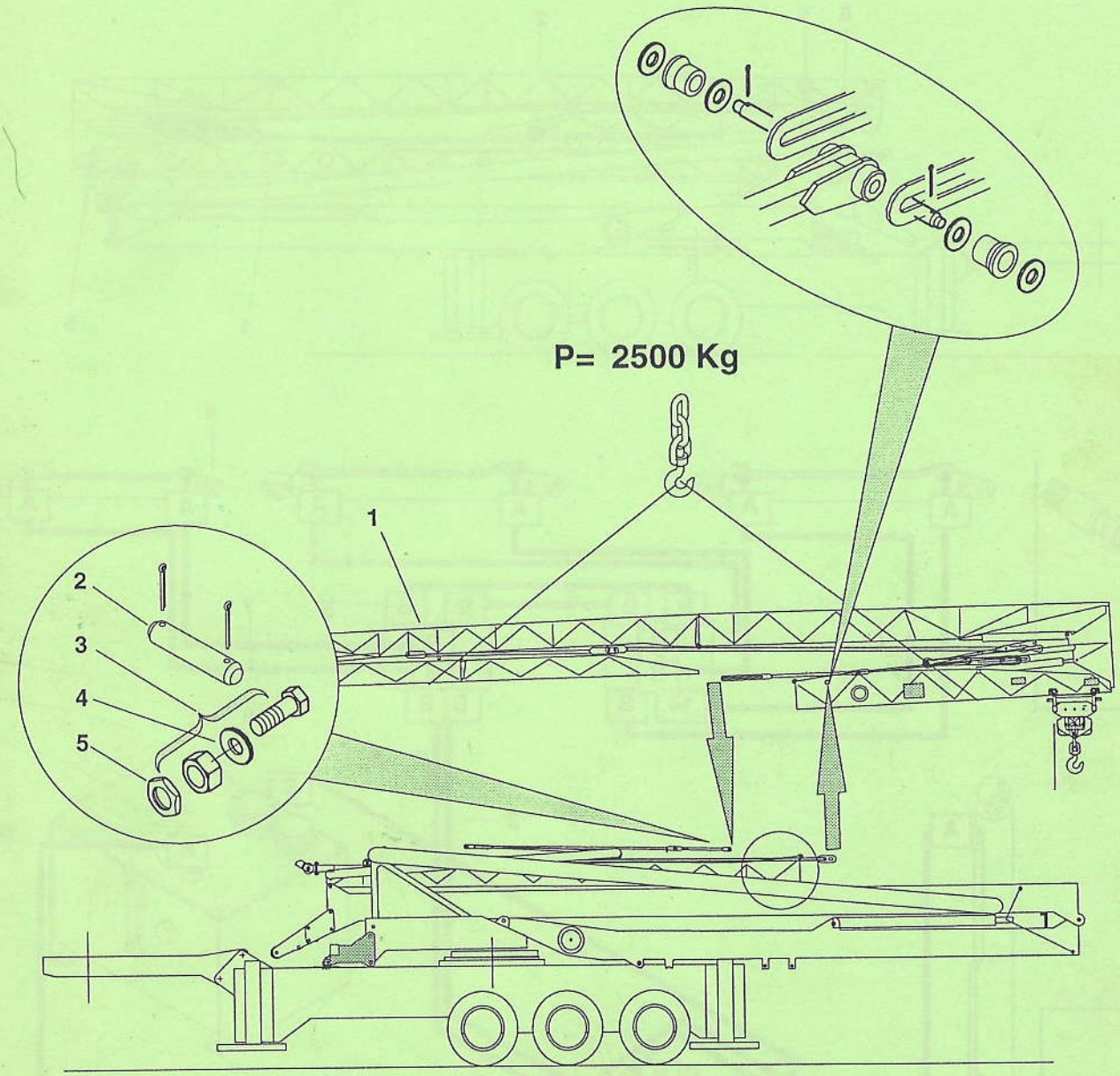

- Reconnect the electric cables to the terminal box (**1**) by observing the marking, and the limit switches of the jib (**2**) (**see page 09R–0100–009–0**).
- Connect the hydraulic hoses (**3**) and (**4**) to the shuttle valve (**5**), then fix them by means of collars instead of those which remained on the jib (***collars not cut***). Observe the hose loops in order to obtain a correct unfolding of the jib.
- Connect the hydraulic hoses (**6**) and (**7**) to the cylinder (**8**).

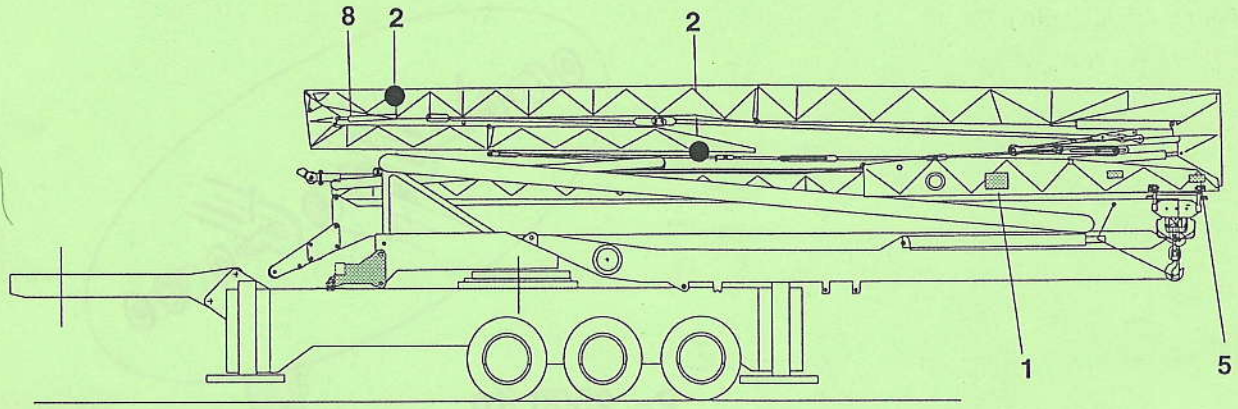

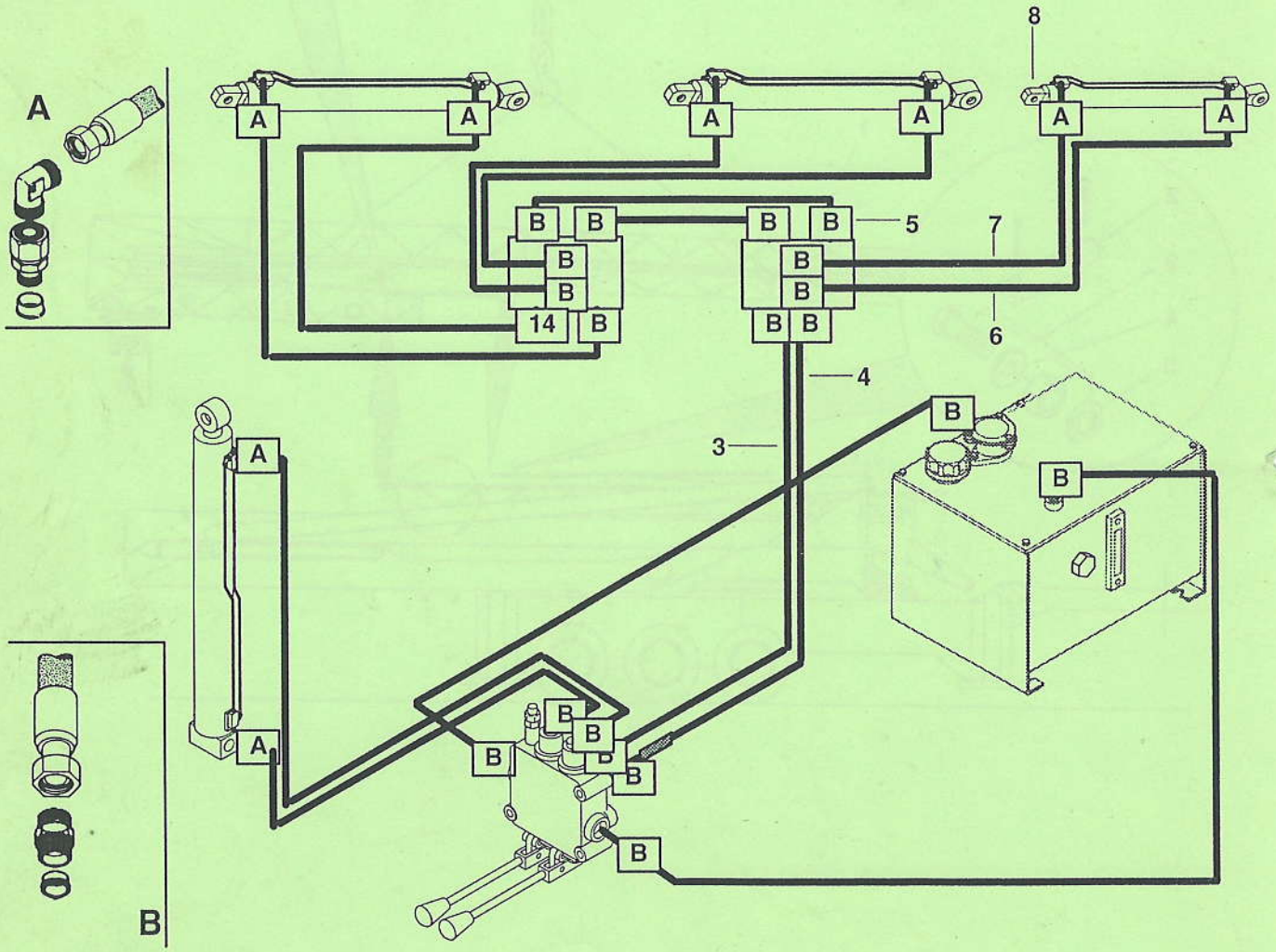

For the following operations, compulsorily consult the erection catalogue.

Connect the crane ***(see page 35 of the erection catalogue)***

Place the ballast on the crane and fix it by means of the rods ***(see page 67R–0001–073–0)***

Place the trailer on the screw jacks (raise the lock (**1**) and unfold the chassis leg) **(see sketch)**

Refit the slewing motor (**2**).

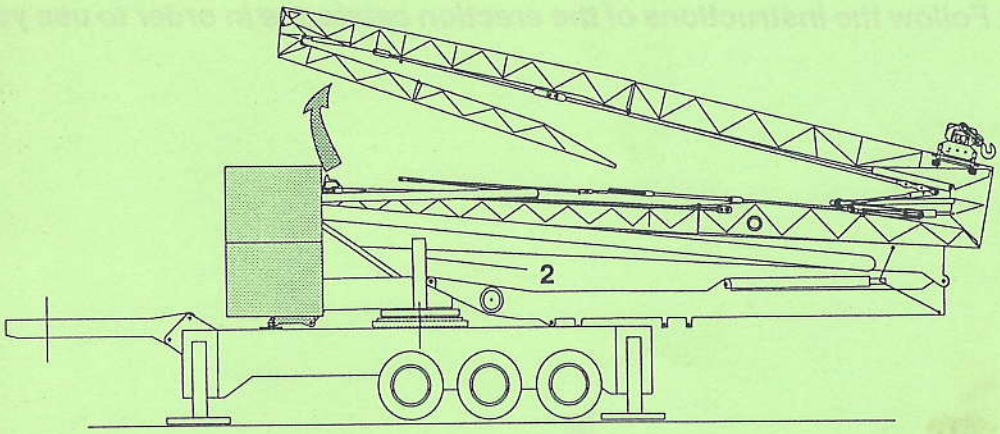

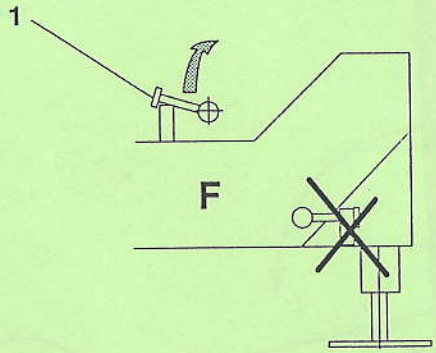

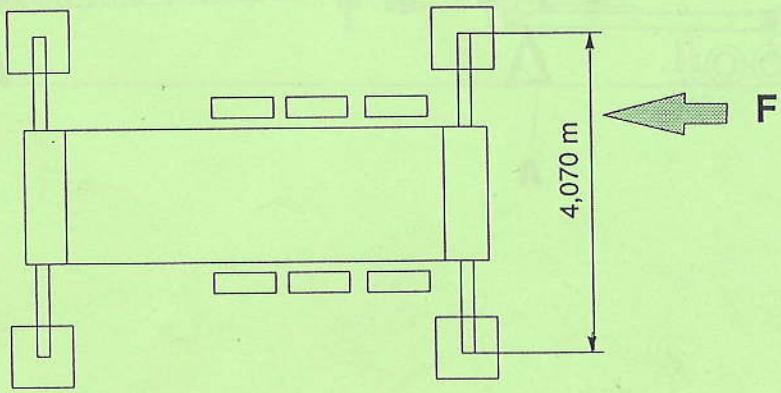

Bleed the jib cylinders by raising slightly the jib (front and rear chamber).

Extend the transporter cylinder **compulsorily** until the yellow line.

Having finished this operation: ***wedge under the mast (A)***; *it is possible to open completely the jib* (***see page 45 and 46 of the erection catalogue "opening the jib"***).
Wedge under the jib nose (*B*).

- Carry out again the rope reeving of the trolley and the hoist ropes (**see page 50A–0500–010–0 and 50A–0600–009–0**).
- Refit the options (**see page 56R–0200–005–0 and 59R–0900–001–0**).

Fold up the jib. ***Follow the instructions of the erection catalogue in order to use your crane.***

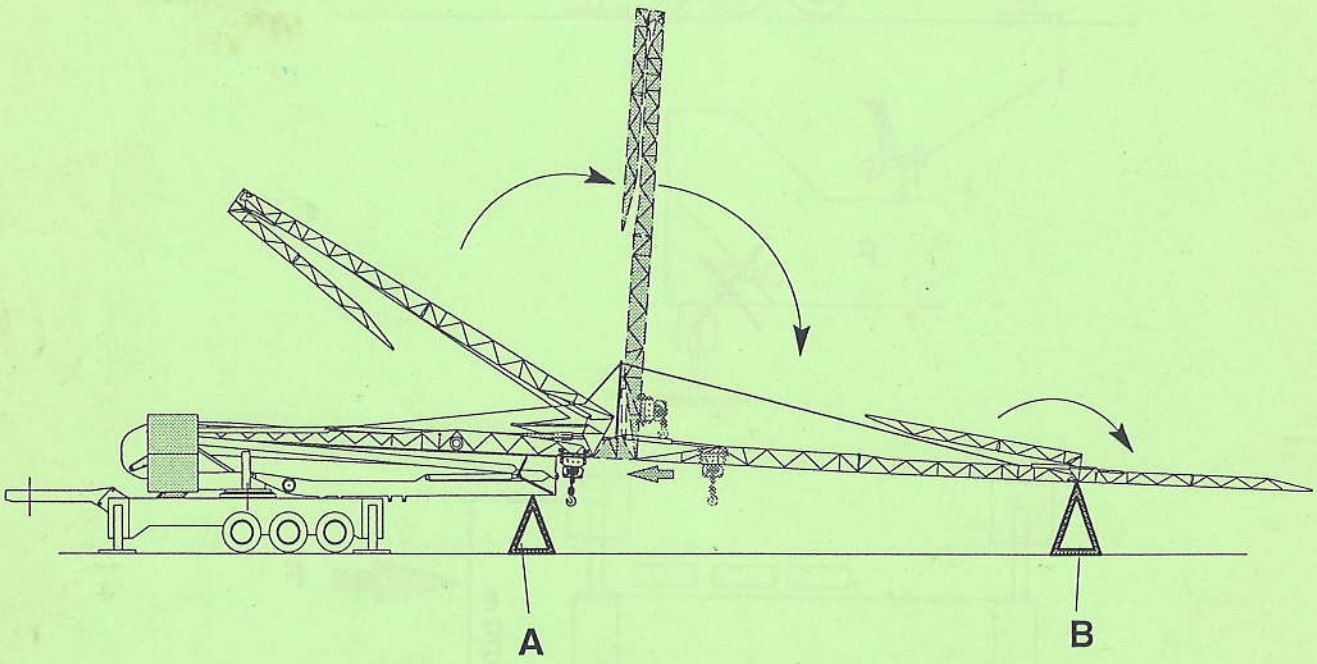

CRANE – GROUND CONNECTION

1. PACKING OF THE JACKS

This support is provided for a ground with medium bearing capacity (**R = 2,2 Kg / cm²**). When the capacity is different, modify the bearing surface accordingly, observing the height of the support (**240 mm**).

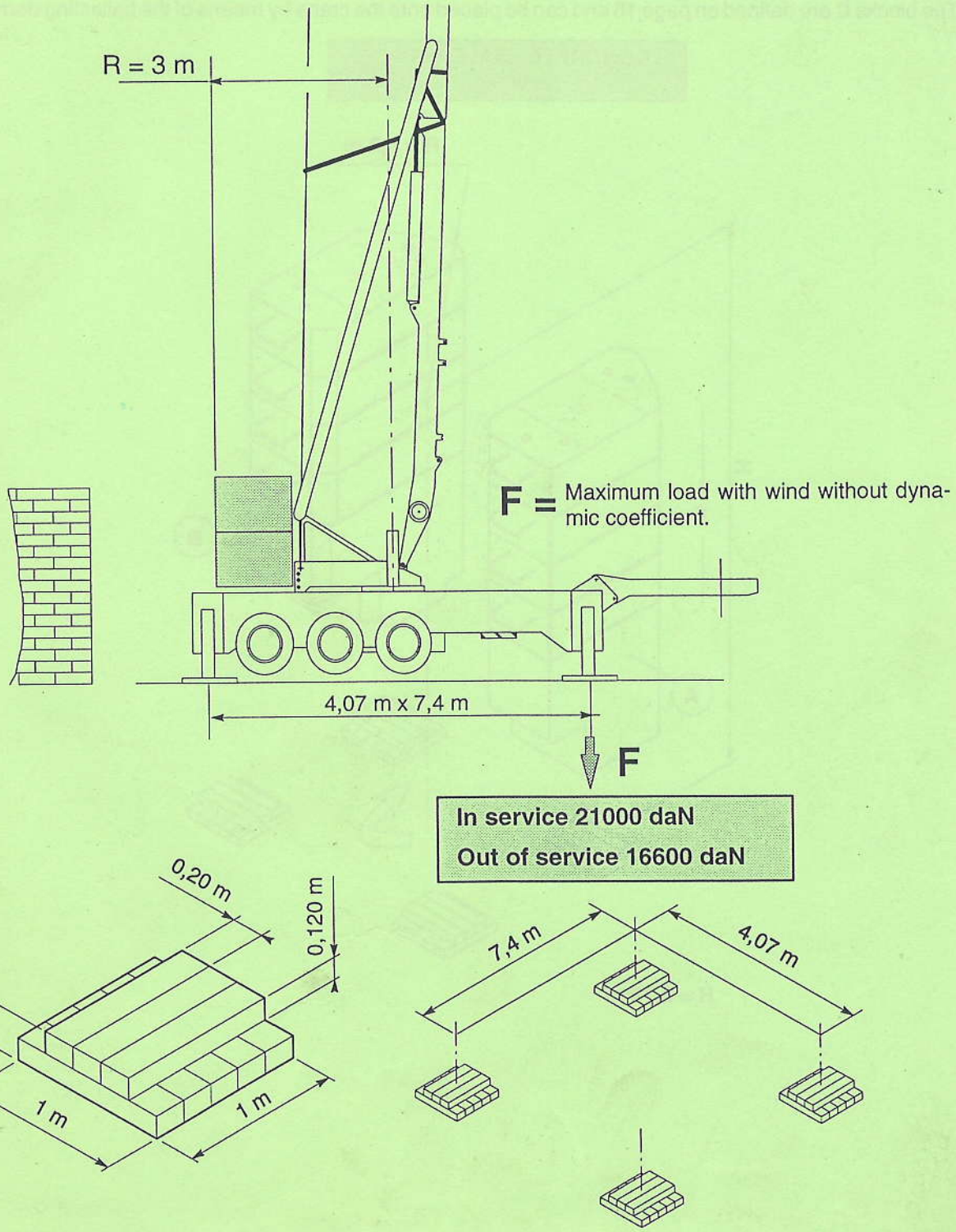

SLEWING BALLAST

1. CONCRETE BALLAST

On each block, mark its weight in a visible and weather–resisting way.

- The ballast consists of : 2 blocks **(A et B) of 2500 kg with density of 3**, + 8 blocks **C of 960 kg with density of 2,3**; total weight = 12500 kg – 0 + 5%.

The blocks **A** and **B** are defined on page 12 and 14.
The blocks **C** are defined on page 16 and can be placed onto the crane by means of the ballasting derrick.

CONCRETE BALLAST
12500 kg

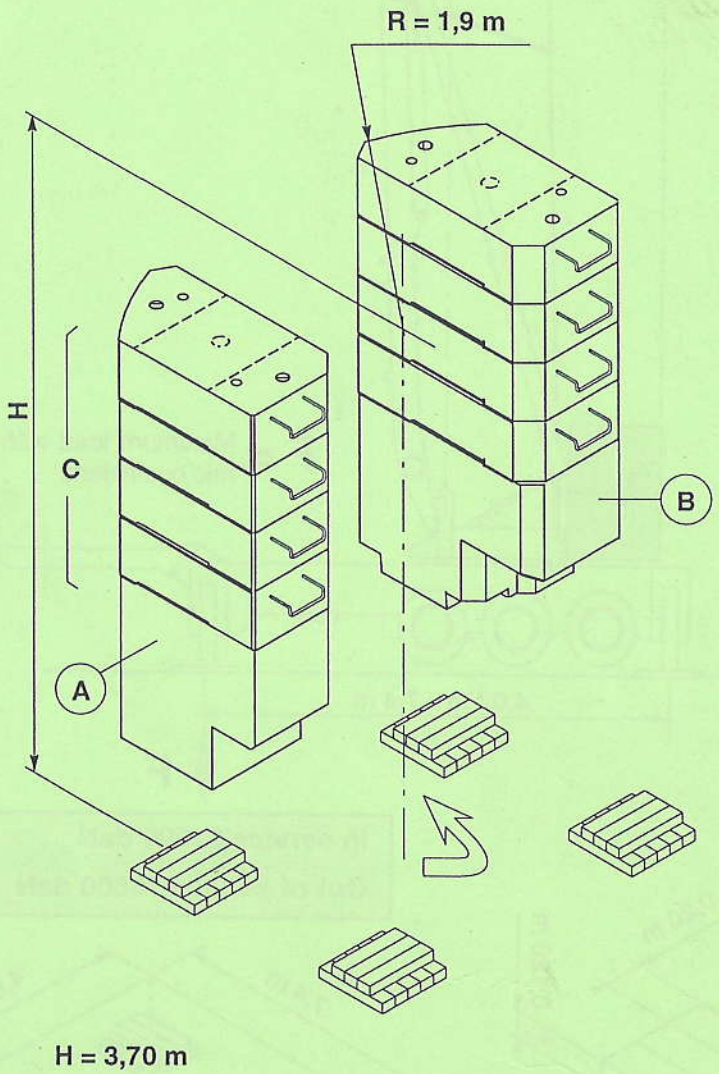

1. 1. DETAILS FOR PREPARING THE BALLAST BLOCKS A

SYMMETRICAL BLOCKS

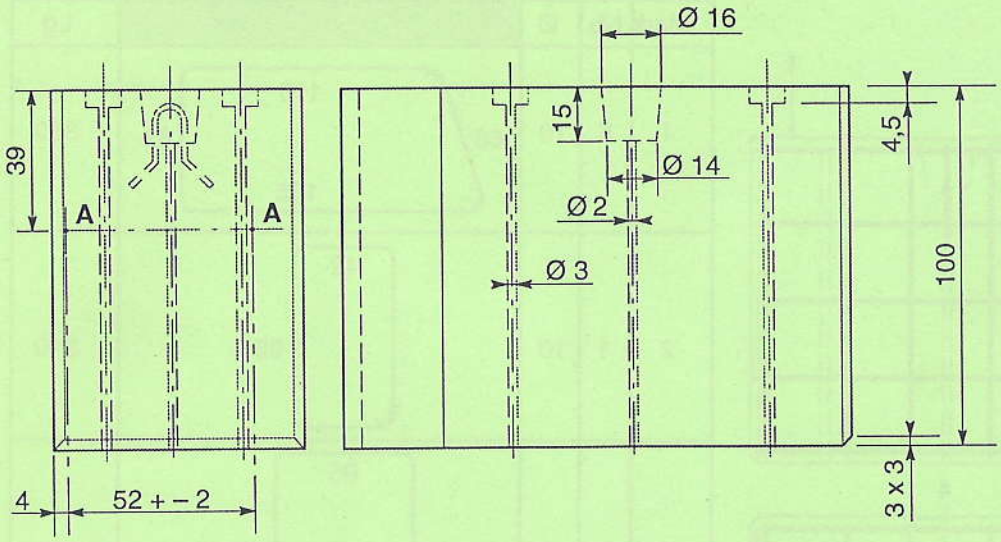

A Tool box fastening, place 2 inserts M 10x30

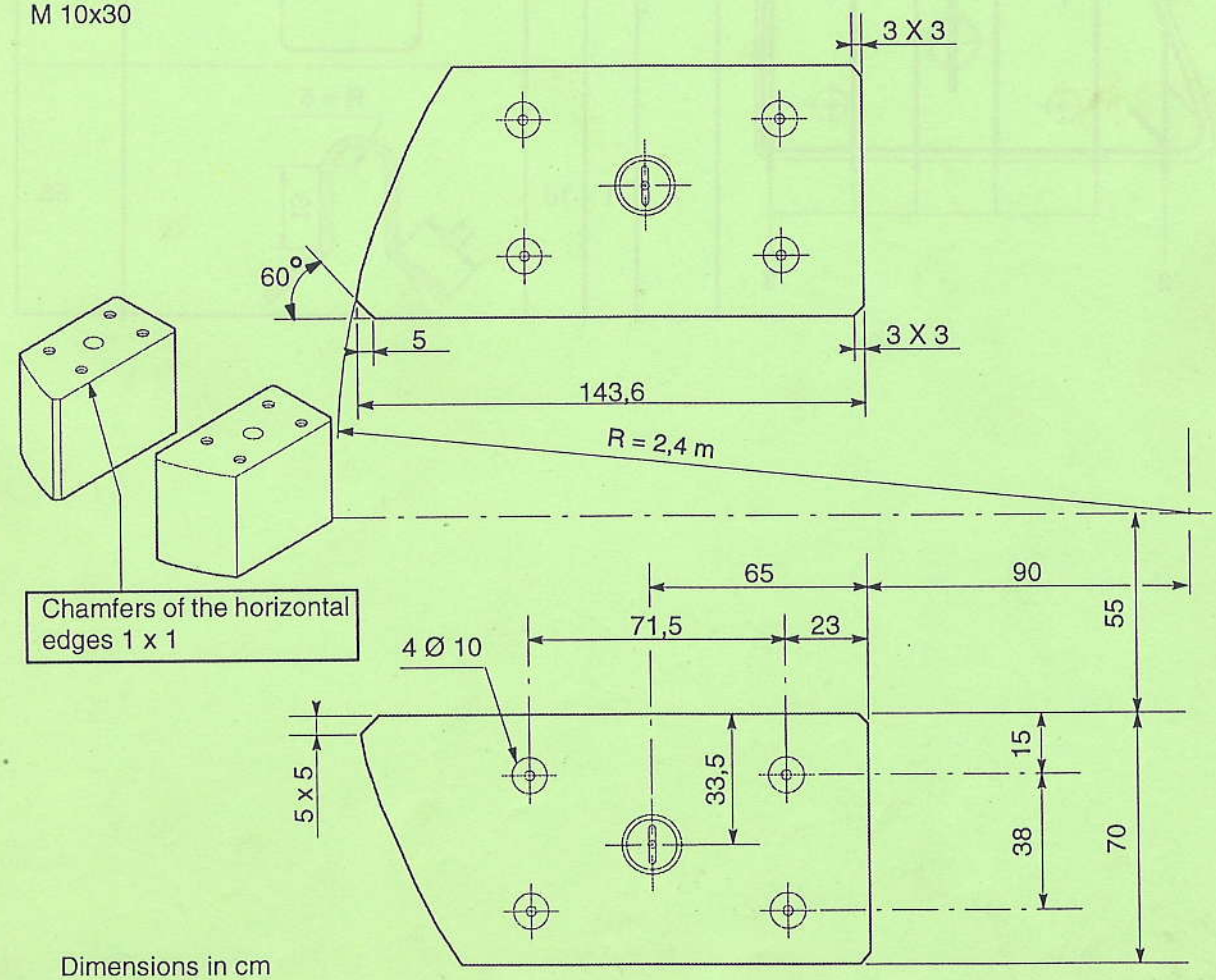

Dimensions in cm

2. REINFORCMENT

2. 1. BLOCK A

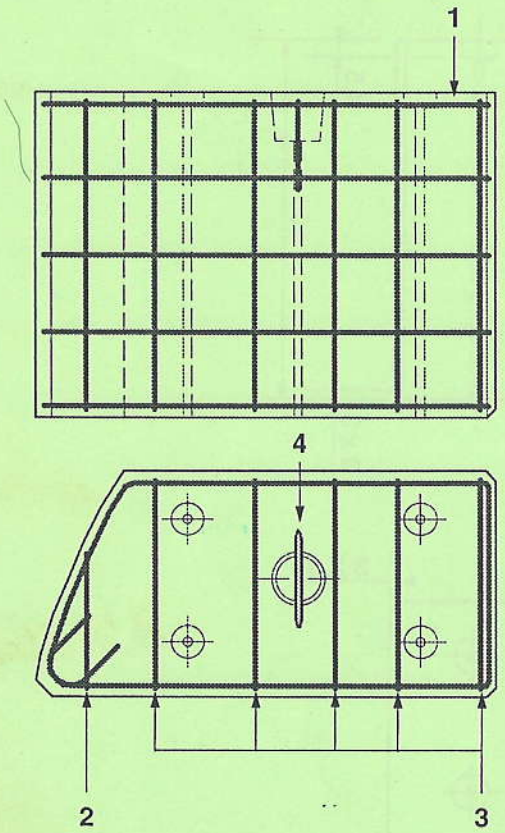

Mark	Nb	Ø		Lg
1	5	10	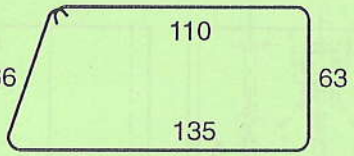	330
2	1	10		310
3	5	10	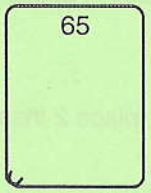	355
4	1	16	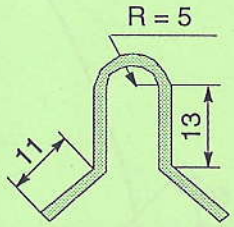	55

3. OUT OF SERVICE CONDITIONS

At each shift end and according to the working position (**A**), move the trolley (**1**) in transport position and raise the pulley block (**2**) without load under the trolley. **Slew the jib in the direction of the wind.**

Cut the power supply by means of the switch (**3**) (in the **LVF version** the switch (**4**) remains on the position " **ON** ") and tighten the knurled knob (**5**) located on the slewing motor cap. The crane is weathervaning.

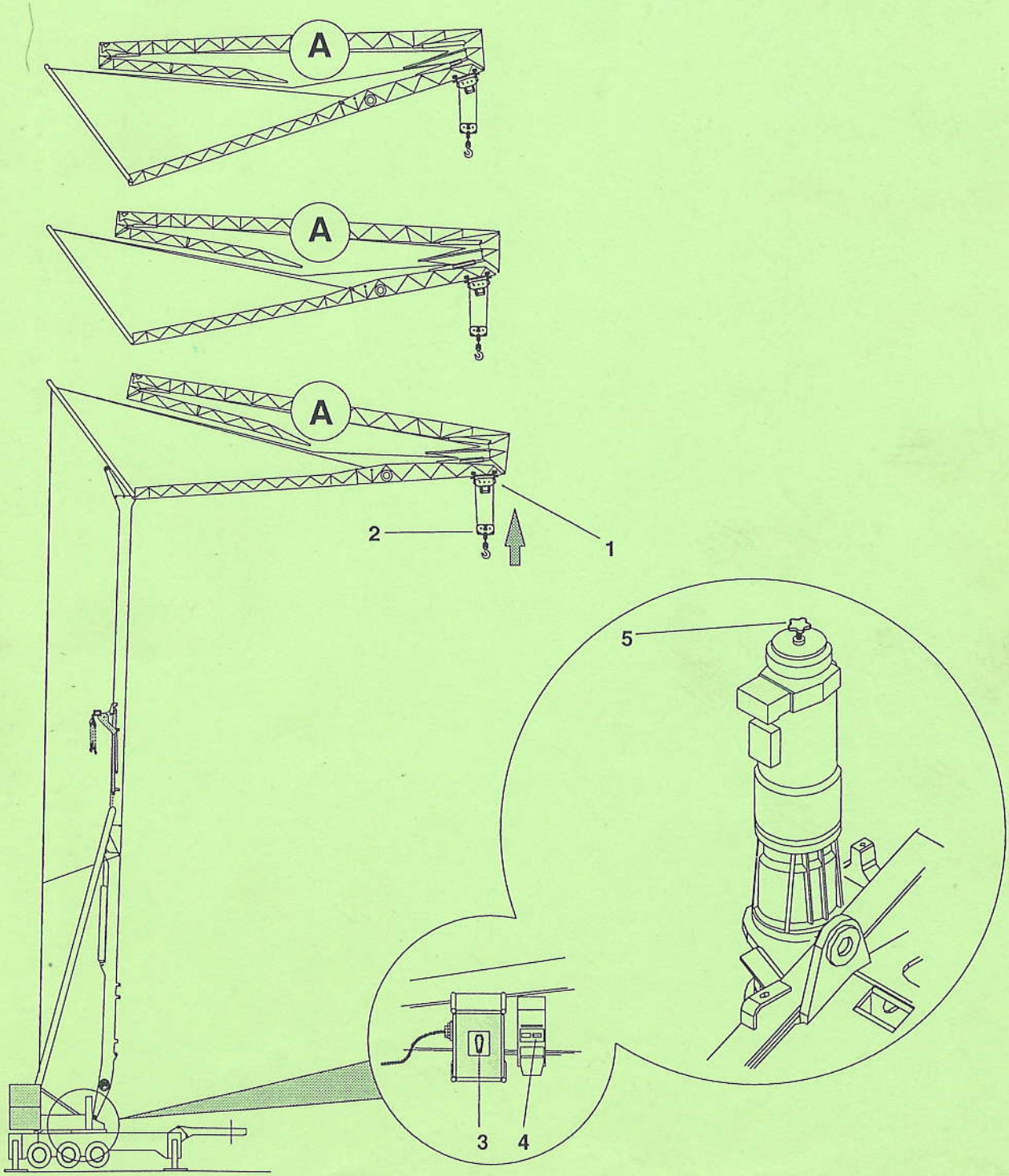

2. ERECTION AREA REQUIRED
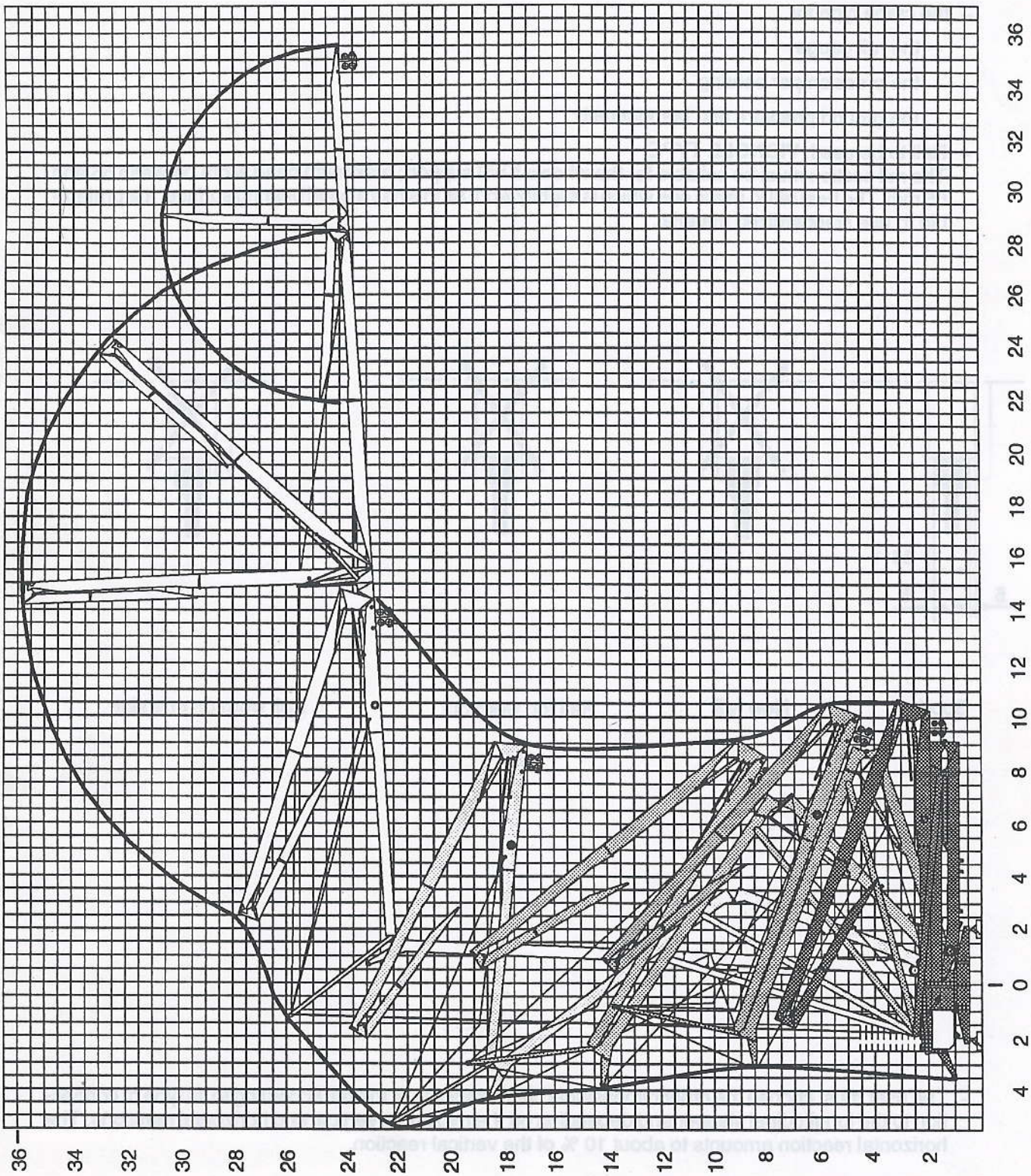
1 square case = 50 cm